JIS

JAPANESE
INDUSTRIAL
STANDARD

Translated and Published by
Japanese Standards Association

JIS K 0107 : 2012

(JEMCA/JSA)

Methods for determination of hydrogen chloride in flue gas

ICS 13.040.40;71.040.40
Reference number : JIS K 0107 : 2012 (E)

PROTECTED BY COPYRIGHT

Date of Establishment: 1967-09-01

Date of Revision: 2012-02-20

Date of Public Notice in Official Gazette: 2012-02-20

Investigated by: Japanese Industrial Standards Committee
Technical Committee on Environment and
Recycling Policy

JIS K 0107 : 2012, First English edition published in 2013-01

Translated and published by: Japanese Standards Association
4-1-24, Akasaka, Minato-ku, Tokyo, 107-8440 JAPAN

In the event of any doubts arising as to the contents,
the original JIS is to be the final authority.

© JSA 2013
All rights reserved. Unless otherwise specified, no part of this publication may be reproduced or utilized in any form or by any means, electronic or mechanical, including photocopying and microfilm, without permission in writing from the publisher.

Printed in Japan NH/HN

PROTECTED BY COPYRIGHT

Contents

Page

1 Scope ····· 1
2 Normative references ····· 1
3 General matters ····· 2
4 Classification and summary of analytical methods ····· 3
5 Sampling method of sample gas ····· 4
5.1 Sampling of sample gas ····· 4
5.2 Reagents and preparation of reagent solutions ····· 5
5.3 Implement and apparatus ····· 5
5.4 Sampling procedure ····· 6
5.5 Sampling volume of sample gas ····· 8
6 Preparation of sample solution for analysis ····· 9
7 Determination method ····· 10
7.1 Ion chromatography ····· 10
7.2 Silver nitrate titrimetry ····· 15
8 Automatic measuring method ····· 17
9 Record of results of analysis ····· 17
9.1 Expression of analysis value ····· 17
9.2 Items to be recorded ····· 17
Annex A (normative) Simultaneous analytical method of hydrogen chloride and sulfur oxides by ion chromatography ····· 22
Annex B (normative) Simultaneous analytical method of hydrogen chloride, sulfur oxides and nitrogen oxides by ion chromatography ····· 26
Annex C (normative) Ion selective electrode method ····· 30
Annex D (informative) Mercury (II) thiocyanate absorptiometry ····· 36

PROTECTED BY COPYRIGHT

Foreword

This translation has been made based on the original Japanese Industrial Standard revised by the Minister of Economy, Trade and Industry, through deliberations at the Japanese Industrial Standards Committee as the result of proposal for revision of Japanese Industrial Standard submitted by Japan Environmental Measurement and Chemical Analysis Association (JEMCA)/Japanese Standards Association (JSA) with the draft being attached, based on the provision of Article 12 Clause 1 of the Industrial Standardization Law applicable to the case of revision by the provision of Article 14.

Consequently **JIS K 0107**:2002 is replaced with this Standard.

This **JIS** document is protected by the Copyright Law.

Attention is drawn to the possibility that some parts of this Standard may conflict with a patent right, application for a patent after opening to the public or utility model right. The relevant Minister and the Japanese Industrial Standards Committee are not responsible for identifying the patent right, application for a patent after opening to the public or the utility model right.

PROTECTED BY COPYRIGHT

Methods for determination of hydrogen chloride in flue gas

1 Scope

This Japanese Industrial Standard specifies the methods for determination of hydrogen chloride in flue gas. In this Standard, the flue gas means the gas which is exhausted into flues, chimneys, ducts, etc. from such processes as burning and chemical reactions.

2 Normative references

The following standards contain provisions which, through reference in this text, constitute provisions of this Standard. For standards with the year indication, only the editions of the indicated year shall be applied and the revisions (including amendments) made thereafter shall not be applied. For those without the indication of the year, the most recent edition (including amendments) shall be applied.

JIS B 7984 *Continuous analyzer for hydrogen chloride in flue gas*

JIS K 0050 *General rules for chemical analysis*

JIS K 0055 *General rules for calibration method of gas analyzer*

JIS K 0095 *Methods for sampling of flue gas*

JIS K 0103 *Methods for determination of sulfur oxides in flue gas*

JIS K 0104 *Methods for determination of nitrogen oxides in flue gas*

JIS K 0106 *Methods for determination of chlorine in flue gas*

JIS K 0115 *General rules for molecular absorptiometric analysis*

JIS K 0122 *General rules for ion selective electrode method*

JIS K 0127 *General rules for ion chromatographic analysis*

JIS K 0557 *Water used for industrial water and wastewater analysis*

JIS K 8005 *Reference materials for volumetric analysis*

JIS K 8032 *Acetonitrile (Reagent)*

JIS K 8121 *Potassium chloride (Reagent)*

JIS K 8223 *Perchloric acid (Reagent)*

JIS K 8230 *Hydrogen peroxide (Reagent)*

JIS K 8295 *Glycerol (Reagent)*

JIS K 8355 *Acetic acid (Reagent)*

JIS K 8371 *Sodium acetate trihydrate (Reagent)*

PROTECTED BY COPYRIGHT

JIS K 8541 *Nitric acid (Reagent)*

JIS K 8548 *Potassium nitrate (Reagent)*

JIS K 8550 *Silver nitrate (Reagent)*

JIS K 8576 *Sodium hydroxide (Reagent)*

JIS K 8622 *Sodium hydrogen carbonate (Reagent)*

JIS K 8625 *Sodium carbonate (Reagent)*

JIS K 8723 *Nitrobenzene (Reagent)*

JIS K 8830 *Uranine (Reagent)*

JIS K 8863 *Boric acid (Reagent)*

JIS K 8866 *Sodium tetraborate decahydrate (Reagent)*

JIS K 8891 *Methanol (Reagent)*

JIS K 8951 *Sulfuric acid (Reagent)*

JIS K 8962 *Potassium sulfate (Reagent)*

JIS K 8982 *Ammonium iron (III) sulfate 12-water (Reagent)*

JIS K 8987 *Sodium sulfate (Reagent)*

JIS K 9000 *Ammonium thiocyanate (Reagent)*

JIS K 9704 *2-Amino-2-hydroxymethyl-1,3-propanediol (Reagent)*

JIS K 9808 *2-Bis (2-hydroxyethyl) amino-2-hydroxymethyl-1,3-propanediol (Bis-Tris)*

JIS R 3503 *Glass apparatus for chemical analysis*

JIS Z 8808 : 1995 *Methods of measuring dust concentration in flue gas*

3 General matters

The general matters shall be as follows.

a) General matters common to the chemical analysis shall be in accordance with **JIS K 0050**.

b) General matters common to the sampling of flue gas shall be in accordance with **JIS K 0095**.

c) General matters common to the ion chromatography shall be in accordance with **JIS K 0127**.

d) General matters common to the ion selective electrode measuring method shall be in accordance with **JIS K 0122**.

e) General matters common to the molecular absorptiometric analysis shall be in accordance with **JIS K 0115**.

f) Water to be used in analysis shall be of A2 or A3 specified in clause **4** of **JIS K 0557**

PROTECTED BY COPYRIGHT

or any water equivalent to these.

g) Reagents to be used shall be of the highest grade or of an appropriate quality as specified in a relevant Japanese Industrial Standard, if applicable. If the reagent does not have a relevant specification in Japanese Industrial Standard, that of a quality adequate for the analysis shall be used.

h) For the reference solution, the reference solution with traceability secured or that solution diluted to a definite concentration, and in addition, the solutions of which the preparation methods are specified for respective test items shall be used.

i) Apparatus and instrument to be used shall be provided with the specified functions.

j) When disposing flue gas, or absorbing solution of the flue gas used for the analysis of hydrogen chloride, it shall be done with utmost care.

NOTE 1 For the reagents with traceability secured, there are the reagents labelled with JCSS mark specified in the national measurement standard (Article 134 of the Measurement Act).

NOTE 2 The units of vol ppm and mg/m^3 indicated in this Standard are the volume fraction and the mass concentration under the standard condition [273.15 K (0 °C), 101.32 kPa].

4 Classification and summary of analytical methods

The classification and summary of analytical methods shall be as given in table 1.

PROTECTED BY COPYRIGHT

Table 1 Type and summary of analysis method

Type of analysis method	Summary of analysis method			Applicable condition
	Outline	Sampling	Determination range vol ppm (mg/m³)	
Ion chromatography	After absorption of hydrogen chloride in sample gas into water, it is introduced into ion chromatograph and chromatogram thereof is recorded.	Absorbing bottle method Absorption solution : water Liquid amount : 25 ml [a] × 2 bottles or 50 ml [b] × 2 bottles Standard sampling volume : 20 L	0.4 to 7.9 [c] (0.6 to 13) 6.3 to 160 (10 to 260)	According to **7.1.1**
Silver nitrate titrimetry	After absorption of hydrogen chloride in sample gas into sodium hydroxide solution, it is made slight acidity, silver nitrate solution is added and the solution is titrated with ammonium thiocyanate solution.	Absorbing bottle method Absorption solution : sodium hydroxide solution of 0.1 mol/L Liquid amount : 50 ml [b] × 2 bottles Standard sampling volume : 80 L	140 to 2 800 [d] (230 to 4 600)	According to **7.2.1**

Notes [a] Liquid amount for absorption when using absorbing bottle (100 ml in capacity).
[b] Liquid amount for absorption when using absorbing bottle (250 ml in capacity).
[c] In the case of employing the sample solution for analysis prepared by diluting 50 ml of absorption solution through which the sample gas has been passed to 100 ml. The determination range shown in this column is obtained according to the standard sampling volume, the amount of sample solution for analysis and the optimum range of the working curve of the sample gas. When determining the concentration in this determination range or under, the concentrating column shall be used. For the concentration over the determination range, the sample solution for analysis shall be diluted to be within the determination range.
[d] In the case of employing the sample solution for analysis prepared by diluting 100 ml of absorption solution through which the sample gas has been passed to 250 ml. The determination range shown in this column is obtained according to the standard sampling volume, the amount of sample solution for analysis and the amount of titre.

In addition, other than methods in table 1, the simultaneous analytical method of hydrogen chloride and sulfur oxides by ion chromatography is specified in Annex A, the simultaneous analysis method of hydrogen chloride, sulfur oxides and nitrogen oxides by ion chromatography is specified in Annex B and the ion selective electrode method is specified in Annex C. Also, the mercury (II) thiocyanate absorptiometry is specified in Annex D as reference.

5 Sampling method of sample gas

5.1 Sampling of sample gas

The sampling method of sample gas shall be as follows.

The sampling position of sample gas shall be selected from the point where representative sample gas can be sampled. The sample gas shall be taken at least twice without interval as far as possible, as a rule, at the same sampling position. Each of them shall be used for the analysis.

PROTECTED BY COPYRIGHT

5.2 Reagents and preparation of reagent solutions

5.2.1 Reagents

The reagents shall be as follows.

a) **Hydrogen peroxide** That specified in **JIS K 8230**.

b) **Sodium hydroxide** That specified in **JIS K 8576**.

5.2.2 Preparation of reagent solutions

5.2.2.1 Absorption solution

The absorption solution shall be as follows.

a) **For ion chromatography** Water specified in **3 f)**.

b) **For silver nitrate titrimetry** Sodium hydroxide solution (0.1 mol/L). Weigh out 4.0 g of sodium hydroxide, and dissolve it in water to make total 1 L.

5.2.2.2 Sodium hydroxide solution (40 g/L)

This solution shall be put in a washing bottle. Dissolve 4 g of sodium hydroxide in water to make total 100 ml.

5.3 Implement and apparatus

5.3.1 Absorbing bottle

The absorbing bottle shall be as follows.

a) **For ion chromatography** Two absorbing bottles (100 ml or 250 ml in capacity) connected as exemplified in figure 1 are used [1].

b) **For silver nitrate titrimetry** Two absorbing bottles (250 ml in capacity) connected as exemplified in figure 1 are used [1].

Note [1] If the complete collection of hydrogen chloride is confirmed, it is permissible to use one absorbing bottle only.

5.3.2 Sampling apparatus of sample gas

The construction of the sampling apparatus is as exemplified in figure 2. The following conditions shall be satisfied.

a) The sampling tube of sample gas (B) shall not be eroded by the corrosive gas in flue gas, and shall be made of the material which does not adsorb the sampling gas such as the stainless steel tube, borosilicate glass tube, quartz tube, tetrafluoro ethylene resin tube.

b) For preventing the dust contamination into the sample gas, the end or other suitable place of sampling tube of sample gas (B) shall be filled with appropriate filtering medium. The filtering medium by which the chemical reaction with the component in flue gas is not produced in material, such as silica wool, non-alkaline glass wool shall be used.

c) For preventing the moisture condensation in the sample gas, the apparatus shall

PROTECTED BY COPYRIGHT

be so constructed that the part from the sampling tube of sample gas (B) to the three-way cock for flow path switch (P_1) can be heated. The piping shall be as short as possible, and if there is a possibility of moisture condensation, the part between the sampling tube and the cock (P_1) shall be heated at about 120 °C.

When sulfur dioxides in flue gas are to be sampled at the same time, the said part shall be heated at about 160 °C.

d) For the connection part heated from the sampling tube of sample gas (B) to the three-way cock for flow path switch (P_1), a stainless steel tube, borosilicate glass tube, fluoro rubber tube, silicone rubber tube, tetrafluoro ethylene resin tube and the like shall be used.

e) The connection of each part in apparatus shall be assembled so as not to leak the gas.

5.4 Sampling procedure

The sampling procedures shall be as follows. The symbols of apparatus adopted here shall be as given in figure 2.

a) Carry out either of the following.

1) **For ion chromatography** Put 25 ml of absorption solution (water) of **5.2.2.1 a)** into each of absorbing bottles (100 ml in capacity) (F_1 and F_2) [2]. In the case of using the absorbing bottles of 250 ml in capacity, put 50 ml of the absorption solution into each bottle.

2) **For silver nitrate titrimetry** Put 50 ml of absorption solution of **5.2.2.1 b)** specified for respective analytical methods into each of absorbing bottles (250 ml in capacity) (F_1 and F_2) [2].

b) Turn the three-way cocks for flow path switch (P_1 and P_2) to bypass side, start the suction pump (L), and replace inside air between the sampling tube of sample gas (B) and the cock (P_1) by the sample gas.

NOTE 1 The bypass (R) between P_1 and P_2 in figure 2 may be omitted, provided that the gas does not leak in a sampling apparatus and the flow rate can be adjusted to a definite amount.

NOTE 2 When it can be confirmed that the leak does not occur in the sampling apparatus by other technique, a mercury manometer (Q) in figure 2 may be omitted.

c) After stopping the suction pump (L), close the three-way cocks for flow path switch (P_1 and P_2) to stop the flow of gas. Then, read the indication (V_1) of a gas meter (M) to the nearest 0.01 L.

d) Start the suction pump (L), turn the three-way cocks for flow path switch and pass the sample gas through the absorbing bottles (F_1 and F_2) [2]. At this time, adjust a flow rate to about 1 L/min by adjusting the flow rate control cocks (K_1 and K_2) [3]. After sampling the sample gas of about 20 L [4], close the three-way cocks for flow path switch (P_1 and P_2), stop the suction pump (L), and read the indication (V_2) of a

PROTECTED BY COPYRIGHT

gas meter (M) to the nearest 0.01 L. At the same time, measure the temperature and the gauge pressure of the gas with the thermometer (N) and the manometer (O) of the gas meter (M). Also, measure the atmospheric pressure.

e) If necessary, measure the moisture in the sample gas according to clause **6** of **JIS Z 8808** : 1995.

Notes [2] If there is a possibility that the absorption solution is warmed, place the absorbing bottles in a cooling tank. In this case, the absorbing bottle as shown in figure 1 a) should be used.

[3] When it has been known that hydrogen chloride will be completely absorbed in the absorption solution for the ion chromatography (when using an absorbing bottle of 250 ml in capacity) and the silver nitrate titrimetry, the flow rate may be increased up to 2 L/min.

[4] This amount may be suitably controlled according to the concentration of hydrogen chloride.

Unit : mm
Inside ( ) for 100 ml and outside ( ) for 250 ml.

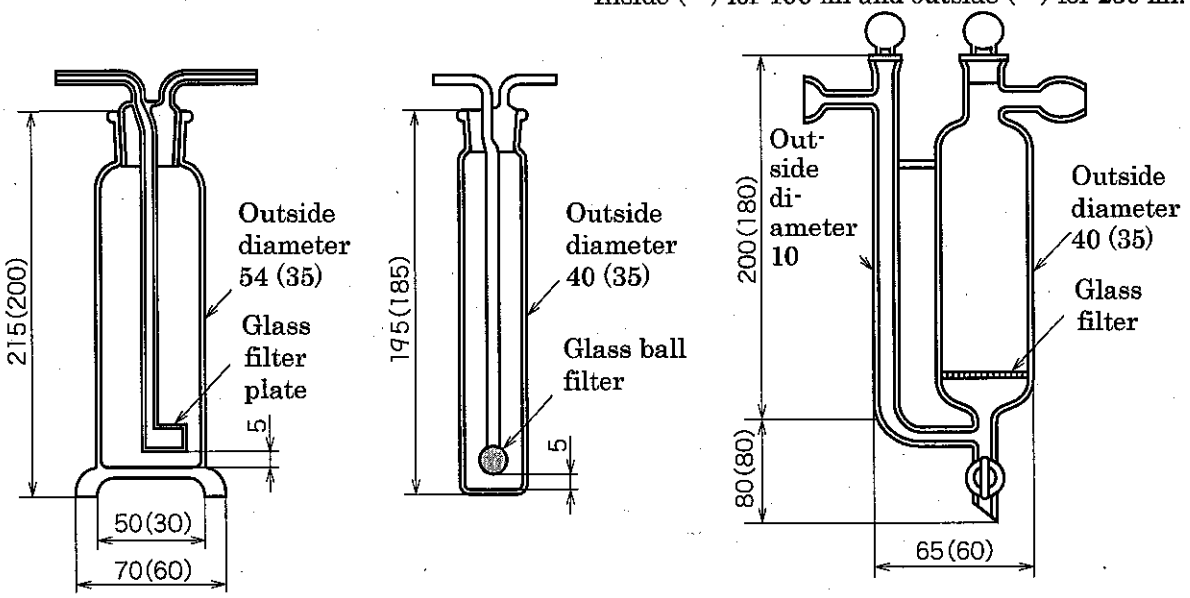

a) **Glass filter plate** b) **Glass ball filter** c) **Glass filter with side tube**

For the pore size of glass filter plate, glass ball filter and glass filter, the pore size symbol 1 or 2 specified in **JIS R 3503** shall be used.

Figure 1 Example of absorbing bottle (100 ml and 250 ml)

PROTECTED BY COPYRIGHT

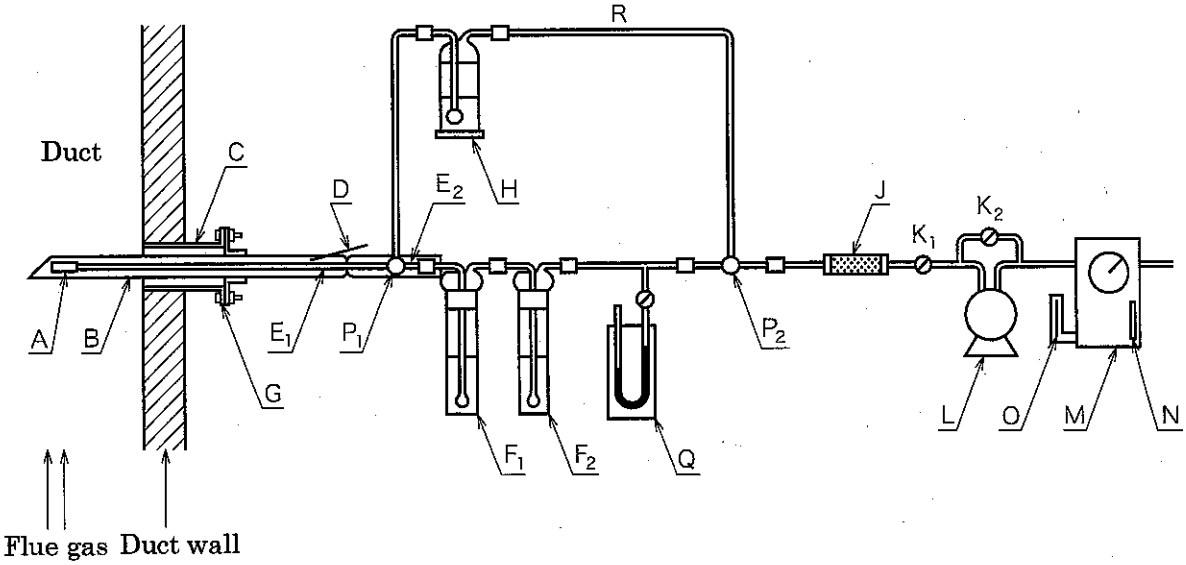

A : filtering medium
B : sampling tube of sample gas
C : inlet
D : thermometer
E_1, E_2 : heaters
F_1, F_2 : absorbing bottle (about 100 ml or 250 ml in capacity) a)
G : flange
H : washing bottle [50 ml of sodium hydroxide solution (40 g/L)]
J : drying tube
K_1, K_2 : flow rate control cocks
L : suction pump
M : wet-base gas meter
N : thermometer
O : manometer
P_1, P_2 : three-way cocks for flow path switch
Q : mercury manometer
R : bypass

Note a) If the complete collection of hydrogen chloride is confirmed, it is permissible to use one absorbing bottle only.

Figure 2 Example of sampling apparatus of sample gas

5.5 Sampling volume of sample gas

According to the following formulae, the sampling volume of sample gas under the standard conditions [273.15 K (0 °C), 101.32 kPa] shall be converted into the dry-base gas volume (V_{SD}) or the wet-base gas volume (V_{SW}).

a) **For dry-base gas volume**

1) When using a wet-base gas meter,

$$V_{SD}=V\times\frac{273.15}{273.15+t}\times\frac{P_a+P_m-P_V}{101.32}+22.41(a+b) \quad \cdots\cdots(1)$$

2) When using a dry-base gas meter,

$$V_{SD}=V\times\frac{273.15}{273.15+t}\times\frac{P_a+P_m}{101.32}+22.41(a+b) \quad \cdots\cdots(2)$$

b) **For wet-base gas volume**

1) When using a wet-base gas meter,

$$V_{SW}=V\times\frac{273.15}{273.15+t}\times\frac{P_a+P_m-P_V}{101.32}+22.41(a+b+c) \quad \cdots\cdots(3)$$

PROTECTED BY COPYRIGHT

2) When using a dry-base gas meter,

$$V_{SW} = V \times \frac{273.15}{273.15+t} \times \frac{P_a+P_m}{101.32} + 22.41(a+b+c) \quad \cdots\cdots (4)$$

where, V_{SD} : dry-base gas volume (L)

V_{SW} : wet-base gas volume (L)

V : gas volume measured by gas meter (L) [$V_2 - V_1$ in procedures of **5.4 c)** and **d)**]

t : temperature at gas meter (°C)

P_a : atmospheric pressure (kPa)

P_m : gauge pressure at gas meter (kPa) [5)]

P_V : saturated water vapour pressure at t °C (kPa) [6)]

a : target gas collected in absorption solution (mol) [5)]

b : gases other than target gas collected in absorption solution (mol) [5)]

c : moisture amount obtained in clause **6** of **JIS Z 8808** : 1995 (mol) [5)]

273.15 : absolute temperature equivalent to 0 °C (K)

101.32 : pressure corresponding to 1 atmospheric pressure (kPa)

22.41 : volume of 1 mol gas under standard condition (L)

Notes [5)] In most cases, it can be neglected.

[6)] About P_V, it is based on the conversion in table 2.

6 Preparation of sample solution for analysis

The preparation of sample solution for analysis shall be carried out according to any of the following.

a) **For ion chromatography**

1) After the procedures of **5.4**, transfer the solution in the absorbing bottles (F_1 and F_2) into a 300 ml beaker, wash the bottles, etc. with water, and join the washings to the said beaker.

2) When using absorbing bottles of 100 ml in capacity, transfer the solution in the beaker into a 100 ml volumetric flask by rinsing with water [7)], and add water up to the marked line. This is used for the sample solution for analysis.

3) When using absorbing bottles of 250 ml in capacity, transfer the solution in the beaker into a 250 ml volumetric flask by rinsing with water [7)], and add water up to the marked line. This is used for the sample solution for analysis.

Note [7)] If solid precipitate is found in the sample solution for analysis, it is recommended to remove it by filtering through the filter with 0.45 μm pore or under beforehand, because the separation column is blocked.

b) **For silver nitrate titrimetry**

PROTECTED BY COPYRIGHT

1) After the procedures of **5.4**, transfer the solution in the absorbing bottles (F_1 and F_2) into a 300 ml beaker, and wash the bottles, etc. with water.

2) Transfer the solution in the beaker into a 250 ml volumetric flask by rinsing with water, and add water up to the marked line. This is used for the sample solution for analysis.

7 Determination method

7.1 Ion chromatography

7.1.1 Condition of application

This method is affected by the coexistence of the reducing gas such as sulfides of high concentration in the sample gas, therefore, it is applicable for the case when the influence thereof can be neglected or eliminated.

7.1.2 Reagents and preparation of reagent solutions

7.1.2.1 Reagents

The reagents shall be as follows.

a) **Sulfuric acid** That specified in **JIS K 8951**.

b) **Sodium carbonate** That specified in **JIS K 8625**.

c) **Sodium hydrogen carbonate** That specified in **JIS K 8622**.

d) **Boric acid** That specified in **JIS K 8863**.

e) **Sodium tetraborate decahydrate** That specified in **JIS K 8866**.

f) **Sodium sulfate** That specified in **JIS K 8987**.

g) **Potassium sulfate** That specified in **JIS K 8962**.

h) **Potassium gluconate**

i) ***p*-hydroxybenzoic acid**

j) **Biochemical reagent–2-bis (2-hydroxyethyl) amino]-2-hydroxymethyl-1, 3-propanediol (bis-tris)** That specified in **JIS K 9808**.

k) **Phthalic acid**

l) **2-Amino-2-hydroxymethyl-1,3-propanediol** That specified in **JIS K 9704**.

m) **Acetonitrile** That specified in **JIS K 8032**.

n) **Glycerol** That specified in **JIS K 8295**.

o) **Sodium chloride** Reference material for volumetric analysis specified in **JIS K 8005**.

p) **Chloride-ion reference solution (Cl^- : 1 000 mg/L)**

q) **Absorption solution** That prepared in **5.2.2.1 a)**.

PROTECTED BY COPYRIGHT

7.1.2.2 Preparation of reagent solutions

The preparation of reagent solutions shall be as follows.

a) **Eluant** The eluant differs depending on the type of apparatus and the type of separation column to be used, therefore the eluant capable of separating the target ion at not less than 1.3 in resolution (R) respectively shall be used. The confirmation of resolution shall be according to clause **10** of **JIS K 0127**.

Examples of eluant are indicated as follows.

NOTE : If it is confirmed so that chloride ion can be measured quantitatively, other eluant than the following may be used according to the property of the separation column.

1) **Hydrogen carbonate-carbonate solution (1)** Dissolve 0.025 g (0.3 mmol) of sodium hydrogen carbonate and 0.286 g (2.7 mmol) of sodium carbonate in water. Transfer the solution into a 1 000 ml volumetric flask by rinsing it with water, and add water up to the marked line.

2) **Hydrogen carbonate-carbonate solution (2)** Dissolve 0.143 g (1.7 mmol) of sodium hydrogen carbonate and 0.191 g (1.8 mmol) of sodium carbonate in water. Transfer the solution into a 1 000 ml volumetric flask by rinsing it with water, and add water up to the marked line.

3) **Gluconate-tetraborate-boric acid solution** Dissolve 0.305 g (1.3 mmol) of potassium gluconate, 0.496 g (1.3 mmol) of sodium tetraborate decahydrate, 1.855 g (30 mmol) of boric acid, 100 ml of acetonitrile, and 5 ml of glycerol in water, transfer the solution into a 1 000 ml volumetric flask by rinsing it with water, and add water up to the marked line.

4) ***p*-hydroxybenzoic acid–2-bis (2-hydroxyethyl) amino-2-hydroxymethyl-1,3-propanediol solution** Dissolve 1.105 g (8.0 mmol) of *p*-hydroxybenzoic acid, and 0.669 g (3.2 mmol) of 2-bis (2-hydroxyethyl) amino-2-hydroxymethyl-1,3-propanediol solution, in water, transfer it into a 1 000 ml volumetric flask by rinsing it with water, and add water up to the marked line.

5) **Phthalic acid-2-amino-2 hydroxymethyl-1,3-propanediol solution** Dissolve 0.415 g (2.5 mmol) of phthalic acid and 0.290 g (2.4 mmol) of 2-amino-2 hydroxymethyl-1, 3-propanediol, or 0.382 g (2.3 mmol) of phthalic acid and 0.303 g (2.5 mmol) of 2-amino-2 hydroxymethyl-1,3-propanediol solution in water, transfer it into a 1 000 ml volumetric flask by rinsing it with water, and add water up to the marked line.

b) **Regeneration solution (removal solution)** This solution is used for regeneration or maintaining continuously the function of a suppressor, and used for regeneration with electrical or chemical methods. The optimum solution shall be used for the type of apparatus and suppressor.

NOTE : The types of regeneration solution and regenerating material, etc. are as follows.

1) **Water** That in **3 f)** is decomposed by an electric current and used

PROTECTED BY COPYRIGHT

for the suppressor in the system producing regeneration solution.

2) **Eluant** That passed through a detector is decomposed by an electric current and used for the suppressor in the system producing regeneration solution.

3) **Sulfuric acid (12.5 mmol/L)** 12.5 ml of sulfuric acid (1 mol/L) is made 1 L with water. This is taken as the regeneration solution.

4) **Ion exchange resin** Cation exchanger is mixed in eluant.

c) **Chloride-ion reference solution (Cl^- : 1 mg/ml)**

Prepare chloride ion reference solution (Cl^- : 1 000 mg/L) in **7.1.2.1 p)**. Otherwise, heat previously sodium chloride in **7.1.2.1 o)** which is the reference material for volumetric analysis at about 600 °C for about 1 h, and allow it to cool in a desiccator. Weigh out 1.648 g of it, and dissolve in a small amount of water. Transfer it into a 1 000 ml volumetric flask by rinsing with water, and add water up to the marked line.

d) **Chloride-ion reference solution (Cl^- : 0.2 mg/ml)**

Take accurately 20 ml of chloride-ion reference solution (Cl^- : 1 mg/ml) prepared in **7.1.2.2 c)** into a 100 ml volumetric flask, and add water up to the marked line. Prepare it when it is used.

e) **Chloride-ion reference solution (Cl^- : 0.01 mg/ml)**

Take accurately 5 ml of chloride-ion reference solution (Cl^- : 0.2 mg/ml) prepared in **7.1.2.2 d)** into a 100 ml volumetric flask, and add water up to the marked line. Prepare it when it is used.

7.1.3 Implements and apparatus

The implements and apparatus shall be as follows.

a) **Sample introducing device** That of automatic type by which a definite amount of the sample solution for analysis is introduced with superior reproducibility into the apparatus. Or that of manual type by which the sample solution is introduced into a sample measuring tube (a definite amount of 10 μl to 250 μl) built-in the apparatus, by using a syringe from 1 ml to 10 ml.

b) **Ion chromatograph** For the ion chromatograph, either of the suppressor system or the non-suppressor system may be used.

1) **Separation column** Tube of 2 mm to 8 mm in inside diameter and 30 mm to 300 mm in length made of inactive synthetic resin or metal, which is packed with anion exchanger and capable of separating the target ion from the adjacent ion by not less than 1.3 in resolution.

2) **Pre-column** Guard column which is used for concentration, pre-separation and foreign matter elimination set before the separation column, if necessary. It shall be the tube made of inactive synthetic resin or metal of 2 mm to 6 mm in inside diameter and 5 mm to 50 mm in length, which is packed with anion exchanger of the same type as that of the separation column.

PROTECTED BY COPYRIGHT

3) **Suppressor** Implement which decreases the electric conductivity by changing the eluant electrically or chemically, in order to measure ion species in the eluant with high sensitivity by using the electric conductivity detector. There are the dialysis type, the column removal type and the suspension resin adsorption type.

4) **Detector** Electric-conductivity detector.

5) **Record parting** According to **4.2 f)** of **JIS K 0127**.

7.1.4 Procedure for determination

The procedure for determination shall be as follows.

a) Set an ion chromatograph to be ready for measurement, and flow eluant through a separation column at a constant flow rate (for example, 1 ml/min to 2 ml/min). For the apparatus with suppressor, flow eluant through inside of the separation column and the suppressor. Also, flow the regeneration solution through outside of the suppressor at a constant flow rate.

b) Introduce a definite amount (10 μl to 250 μl) of sample solution for analysis prepared in **6 a)** using the sample introducing device into the ion chromatograph, and record the chromatogram.

When the sample of specially low concentration is measured, instead of the sample measuring tube in the apparatus, the concentrating column should be preferably used, with which anion exchanger of the same type as that in separation column is packed.

c) Obtain the peak area or the peak height from the peak corresponding to chloride ion on the chromatogram.

d) Obtain the concentration of chloride ion (mg/ml) with the working curve prepared in **7.1.5**.

e) Take 50 ml of absorption solution into a 100 ml volumetric flask, add water up to the marked line, use the same amount as introduced in **b)**, carry out the procedures according to **b)** and **c)**, and obtain the blank test value (mg/ml) of chloride ion.

When the absorbing bottle of 250 ml in capacity is used, take 100 ml of absorption solution into a 250 ml volumetric flask, add water up to the marked line, and carry out the same procedures.

7.1.5 Preparation of working curve

The preparation of the working curve shall be as follows.

a) Take stepwise 1.0 ml to 25.0 ml of chloride-ion reference solution (Cl^- : 0.01 mg/ml) into several volumetric flasks of 100 ml, add water up to the marked line respectively, and obtain each concentration. For the chloride-ion reference solution, take several points within the range between 1 ml and 25 ml corresponding to the expected concentration of sample.

In the case of using the absorbing bottle of 250 ml in capacity, take stepwise 1.0 ml to 25.0 ml of chloride-ion reference solution (Cl^- : 0.2 mg/ml) into several volu-

PROTECTED BY COPYRIGHT

metric flasks of 250 ml in capacity, add water up to the marked line, and carry out the same operation and prepare the working curve.

b) Carry out the procedures of **b)** and **c)** of **7.1.4**, and obtain the peak area or the peak height which corresponds to each chloride ion concentration.

c) As the blank test, carry out the procedures of **b)** and **c)** of **7.1.4** for water, obtain the peak area or the peak height which corresponds to each chloride ion concentration.

d) Plot the relation curve between the concentration of chloride ion and the peak area or the peak height which has been corrected by the blank test value. Prepare the working curve on every measurement of the sample.

7.1.6 Calculation

The concentration of hydrogen chloride in sample gas shall be calculated according to the following formula (5) to formula (7).

$$C_V = \frac{0.632 \times (a-b) \times v}{V_S} \times 1\,000 \quad \cdots\cdots (5)$$

$$C_W = \frac{1.03 \times (a-b) \times v}{V_S} \times 1\,000 \quad \cdots\cdots (6)$$

$$C_W = C_V \times 1.63 \quad \cdots\cdots (7)$$

where, C_V : volume fraction of hydrogen chloride in sample gas (vol ppm)

C_W : mass concentration of hydrogen chloride in sample gas (mg/m^3)

a : concentration of chloride ion obtained in **7.1.4 d)** (mg/ml)

b : concentration of chloride ion obtained by blank test in **7.1.4 e)** (mg/ml)

V_S : sampling volume of sample gas under standard condition calculated according to **5.5** (L) (V_{SD} for dry-base gas volume and V_{SW} for wet-base gas volume)

v : liquid amount of sample solution for analysis (100 for 100 ml and 250 for 250 ml in **6 a)** (ml)

0.632 : volume of hydrogen chloride (HCl) equivalent to 1 mg of chloride ion (Cl^-) (ml) (standard condition)

1.03 : mass of hydrogen chloride (HCl) equivalent to 1 mg of chloride ion (Cl^-) (mg)

1.63 : mass concentration of hydrogen chloride (HCl) equivalent to 1 vol ppm of hydrogen chloride (mg/m^3) (according to 36.45/22.41)

NOTE : Sulfur oxide and nitrogen oxides can be measured simultaneously to hydrogen chloride according to this method. The operation in this case shall be according to **A.6** and **B.6**.

PROTECTED BY COPYRIGHT

7.2 Silver nitrate titrimetry

7.2.1 Condition of application

This method is affected by the coexistence of sulfur dioxide, other halogenides, cyanide, sulfide in the sample gas, therefore, it is applicable for the case when the influence thereof can be neglected or eliminated.

7.2.2 Reagents and preparation of reagent solutions

7.2.2.1 Reagents

The reagents shall be as follows.

a) **Nitric acid** That specified in **JIS K 8541**.

b) **Perchloric acid** That specified in **JIS K 8223**.

c) **Silver nitrate** That specified in **JIS K 8550**.

d) **Ammonium iron (III) sulfate 12-water** That specified in **JIS K 8982**.

e) **Ammonium thiocyanate** That specified in **JIS K 9000**.

f) **Nitrobenzene** That specified in **JIS K 8723**.

g) **Uranine** That specified in **JIS K 8830**.

h) **Absorption solution [sodium hydroxide solution (0.1 mol/L)]** Prepared in **5.2.2.1 b)**.

7.2.2.2 Preparation of reagent solutions

The preparation of reagent solutions shall be as follows.

a) **Nitric acid (1.6 mol/L)** Take 120 ml of nitric acid and dissolve it in water to make total 1 L.

b) **Ammonium iron (III) sulfate solution** Dissolve 6.0 g of ammonium iron (III) sulfate 12-water in 100 ml of perchloric acid (1+2). Preserve it in a brown coloured bottle.

c) **Uranine** Dissolve 0.20 g of uranine in water to make total 100 ml. Preserve it in a brown coloured bottle.

d) **0.1 mol/L silver nitrate solution** Dissolve 17 g of silver nitrate in 1 L of water. Preserve it in a brown coloured bottle. Standardization is as follows.

Standardization Heat sodium chloride reference material for volumetric analysis at 600 °C for about 60 min, and allow it to cool in a desiccator. Weigh 0.14 g to 0.17 g of it to the nearest 0.1 mg, transfer it into a 200 ml conical flask, and add 50 ml of water to dissolve it. Add several drops of uranine solution, titrate it with silver nitrate solution prepared herein, and take the point where the solution turns faint red as the end point. Calculate the factor according to the following formula.

$$f=\frac{m\times\frac{c}{100}}{a'\times 0.005\,844} \quad \cdots\cdots (8)$$

PROTECTED BY COPYRIGHT

where, f : factor of 0.1 mol/L silver nitrate solution

m : amount of sodium chloride taken (g)

c : purity of sodium chloride (%)

a': amount of 0.1 mol/L silver nitrate solution consumed for titration (ml)

0.005 844: amount of sodium chloride equivalent to 1 ml of 0.1 mol/L silver nitrate solution (g)

e) **0.1 mol/L ammonium thiocyanate solution** Dissolve 8 g of ammonium thiocyanate in 1 L of water. Standardization is as follows.

Standardization Take accurately 25 ml of 0.1 mol/L silver nitrate solution prepared in **d)** into a 200 ml conical flask, and add 25 ml of water and 2 ml of nitric acid. Add several drops of ammonium iron (III) sulfate solution as indicator, titrate it with 0.1 mol/L ammonium thiocyanate solution prepared here while shaking and mixing sufficiently, and take the point where faint red of the solution does not disappear as the end point. If the end point is almost indistinguishable, add 10 ml of nitrobenzene [8]. Calculate the factor according to the following formula.

$$f''=\frac{f\times 25}{a''} \quad \cdots\cdots (9)$$

where, f'' : factor of 0.1 mol/L ammonium thiocyanate solution

f : factor of 0.1 mol/L silver nitrate solution

a'' : amount of 0.1 mol/L ammonium thiocyanate solution consumed for titration (ml)

7.2.3 Procedure for determination

The procedure for determination shall be as follows.

a) Take v ml (generally, 25 ml to 50 ml) out of sample solution for analysis prepared in **6 b)**, put it into a conical flask, and add nitric acid (100 g/L) to make it acidic.

b) Add accurately 25 ml of 0.1 mol/L silver nitrate solution, add 1 ml of ammonium iron (III) sulfate solution, and shake and mix the solution.

c) Titrate the solution with 0.1 mol/L ammonium thiocyanate solution until a point where faint red colour of the solution disappears. If the end point is almost indistinguishable, add 3 ml of nitrobenzene [8].

d) Obtain the blank-test value according to the procedures **a)** to **c)** by using v ml of the absorption solution which is diluted 2.5 times by water.

Note [8] The waste water shall be treated with special caution, because nitrobenzene is contained in waste water.

7.2.4 Calculation

The concentration of hydrogen chloride in the sample gas shall be calculated according to the following formula (10) to formula (12).

PROTECTED BY COPYRIGHT

$$C_V = \frac{2.24 \times (b-a) \times f \times 250/v}{V_S} \times 1\,000 \quad \cdots\cdots (10)$$

$$C_W = \frac{3.65 \times (b-a) \times f \times 250/v}{V_S} \times 1\,000 \quad \cdots\cdots (11)$$

$$C_W = C_V \times 1.63 \quad \cdots\cdots (12)$$

where, C_V : volume fraction of hydrogen chloride in sample gas (vol ppm)

C_W : mass concentration of hydrogen chloride in sample gas (mg/m^3)

a : volume of 0.1 mol/L ammonium thiocyanate solution consumed for titration in **7.2.3 c)** (ml)

b : volume of 0.1 mol/L ammonium thiocyanate solution consumed in blank test in **7.2.3 d)** (ml)

f : factor of 0.1 mol/L ammonium thiocyanate solution

v : amount taken out for 250 ml of sample solution for analysis (ml)

V_S : sampling volume of sample gas under standard condition calculated according to **5.5** (L) (V_{SD} for dry-base gas volume, V_{SW} for wet-base gas volume)

2.24 : volume of hydrogen chloride (HCl) equivalent to 1 ml of 0.1 mol/L ammonium thiocyanate solution (standard condition) (ml)

3.65 : mass of hydrogen chloride (HCl) equivalent to 1 ml of 0.1 mol/L ammonium thiocyanate solution (mg)

1.63 : mass concentration of hydrogen chloride (HCl) equivalent to 1 vol ppm of hydrogen chloride (mg/m^3) (according to 36.45/22.41)

8 Automatic measuring method

The measurement according to the automatic measuring method shall be carried out by the automatic measuring instrument specified in **JIS B 7984**. The calibration shall be carried out as specified in **JIS K 0055**.

9 Record of results of analysis

9.1 Expression of analysis value

The analysis shall be carried out two or more times on the same sample solution for analysis or the test solution for respective samples. The mean value thereof shall be obtained and rounded to two significant figures. When the sample is taken successively two or more times, all of the mean values of respective measured values shall be obtained.

9.2 Items to be recorded

The items to be recorded as the results of analysis shall be as follows.

PROTECTED BY COPYRIGHT

a) facility of target and purpose of test

b) execution date, time, period of time, performer of sampling and analysis

c) operating situation of facility or process, and variation of facility or process generated during sampling period

d) position of measurement sampling surface in facility

e) sampling point on measurement sampling surface

Example : It is recommended to enter the size of duct, the sampling position on measurement section and the like.

f) sampling method

Example : It is recommended to enter the sampling method of sample gas, the isokinetic sampling or the non-isokinetic sampling, the opening size of sampling tube, the filter for dust removing and attached position of it, the filter temperature, the period of time of sampling, and the like.

g) type of analytical method

h) measurement results

Example : It is recommended to enter the flow rate of gas at measuring point, the static pressure, temperature, oxygen concentration, water vapour concentration of flue gas, the amount of sampling gas, the volume of sample for analysis, the analysis value of hydrogen chloride in sample, the abnormality produced in the sampling period of time and the like, in addition to the concentration in flue gas and the converted concentration under the standard condition.

i) quality of measurement

Example : It is recommended to enter the leak test results, the blank test values for sampling and reagents for analysis, the blank test values at in-site measurement, the special circumstances at the environment which influences possibly upon the measured value and the like.

j) altered point from the analytical method of this Standard

k) when there are useful items other than **a)** to **j)**, those should be added.

PROTECTED BY COPYRIGHT

Table 2 Saturated vapour pressure of water

Unit : kPa

T(°C)	0.0	0.1	0.2	0.3	0.4	0.5	0.6	0.7	0.8	0.9
0.	611.21	615.67	620.15	624.67	629.21	633.78	638.38	643.01	647.67	652.36
1.	657.08	661.83	666.61	671.42	676.26	681.14	686.04	690.98	695.94	700.94
2.	705.97	711.03	716.13	721.26	726.41	731.61	736.83	742.09	747.38	752.70
3.	758.06	763.45	768.88	774.34	779.83	785.36	790.92	796.52	802.15	807.82
4.	813.52	819.26	825.03	830.84	836.69	842.57	848.49	854.45	860.44	866.47
5.	872.54	878.64	884.79	890.97	897.19	903.44	909.74	916.07	922.45	928.86
6.	935.31	941.80	948.34	954.91	961.52	968.17	974.86	981.60	988.37	995.19
7.	1 002.0	1 008.9	1 015.9	1 022.9	1 029.9	1 037.0	1 044.1	1 051.2	1 058.4	1 065.7
8.	1 072.9	1 080.3	1 087.6	1 095.1	1 102.5	1 110.0	1 117.6	1 125.2	1 132.8	1 140.5
9.	1 148.2	1 156.0	1 163.8	1 171.7	1 179.6	1 187.6	1 195.6	1 203.7	1 211.8	1 219.9
10.	1 228.1	1 236.4	1 244.7	1 253.0	1 261.4	1 269.9	1 278.4	1 286.9	1 295.5	1 304.2
11.	1 312.9	1 321.7	1 330.5	1 339.3	1 348.2	1 357.2	1 366.2	1 375.3	1 384.4	1 393.5
12.	1 402.8	1 412.1	1 421.4	1 430.8	1 440.2	1 449.7	1 459.3	1 468.9	1 478.5	1 488.2
13.	1 498.0	1 507.8	1 517.7	1 527.7	1 537.7	1 547.7	1 557.9	1 568.0	1 578.3	1 588.6
14.	1 598.9	1 609.3	1 619.8	1 630.3	1 640.9	1 651.6	1 662.3	1 673.0	1 683.9	1 694.8
15.	1 705.7	1 716.7	1 727.8	1 739.0	1 750.2	1 761.4	1 772.8	1 784.2	1 795.6	1 807.1
16.	1 818.7	1 830.4	1 842.1	1 853.9	1 865.8	1 877.7	1 889.7	1 901.7	1 913.8	1 926.0
17.	1 938.3	1 950.6	1 963.0	1 975.5	1 988.0	2 000.6	2 013.3	2 026.0	2 038.8	2 051.7
18.	2 064.7	2 077.7	2 090.8	2 104.0	2 117.2	2 130.5	2 143.9	2 157.4	2 170.9	2 184.5
19.	2 198.2	2 212.0	2 225.8	2 239.7	2 253.7	2 267.8	2 281.9	2 296.1	2 310.4	2 324.8
20.	2 339.2	2 353.8	2 368.4	2 383.1	2 397.8	2 412.7	2 427.6	2 442.6	2 457.7	2 472.9
21.	2 488.2	2 503.5	2 518.9	2 534.4	2 550.0	2 565.7	2 581.4	2 597.3	2 613.2	2 629.2
22.	2 645.3	2 661.5	2 677.7	2 694.1	2 710.5	2 727.1	2 743.7	2 760.4	2 777.2	2 794.1
23.	2 811.0	2 828.1	2 845.2	2 862.5	2 879.8	2 897.2	2 914.8	2 932.4	2 950.1	2 967.9
24.	2 985.8	3 003.7	3 021.8	3 040.0	3 058.3	3 076.6	3 095.1	3 113.6	3 132.3	3 151.1
25.	3 169.9	3 188.9	3 207.9	3 227.0	3 246.3	3 265.6	3 285.1	3 304.6	3 324.3	3 344.0
26.	3 363.9	3 383.8	3 403.9	3 424.0	3 444.3	3 464.7	3 485.2	3 505.7	3 526.4	3 547.2
27.	3 568.1	3 589.1	3 610.2	3 631.5	3 652.8	3 674.2	3 695.8	3 717.4	3 739.2	3 761.1
28.	3 783.1	3 805.2	3 827.4	3 849.7	3 872.2	3 894.7	3 917.4	3 940.2	3 963.1	3 986.1
29.	4 009.2	4 032.5	4 055.8	4 079.3	4 102.9	4 126.6	4 150.5	4 174.4	4 198.5	4 222.7
30.	4 247.0	4 271.5	4 296.0	4 320.7	4 345.5	4 370.5	4 395.5	4 420.7	4 446.0	4 471.5
31.	4 497.0	4 522.7	4 648.5	4 574.5	4 600.5	4 626.7	4 653.1	4 679.5	4 706.1	4 732.8
32.	4 759.7	4 786.7	4 813.8	4 841.0	4 868.4	4 895.9	4 923.6	4 951.4	4 979.3	5 007.4
33.	5 035.6	5 063.9	5 092.4	5 121.0	5 149.7	5 178.6	5 207.7	5 236.8	5 266.2	5 295.6
34.	5 325.2	5 355.0	5 384.8	5 414.9	5 445.1	5 475.4	5 505.9	5 536.5	5 567.2	5 598.1
35.	5 629.2	5 660.4	5 691.8	5 723.3	5 754.9	5 786.8	5 818.7	5 850.8	5 883.1	5 915.5
36.	5 948.1	5 980.8	6 013.7	6 046.8	6 080.0	6 113.3	6 146.9	6 180.5	6 214.4	6 248.4
37.	6 282.5	6 316.9	6 351.3	6 386.0	6 420.8	6 455.8	6 490.9	6 526.2	6 561.7	6 597.3
38.	6 633.1	6 669.1	6 705.2	6 741.5	6 778.0	6 814.7	6 851.5	6 888.5	6 925.6	6 963.0
39.	7 000.5	7 038.2	7 076.0	7 114.1	7 152.3	7 190.7	7 229.2	7 268.0	7 306.9	7 346.0
40.	7 385.3	7 424.8	7 464.4	7 504.2	7 544.3	7 584.5	7 624.8	7 665.4	7 706.2	7 747.1

PROTECTED BY COPYRIGHT

Table 2 (continued)

Unit : kPa

T(°C)	0.0	0.1	0.2	0.3	0.4	0.5	0.6	0.7	0.8	0.9
41.	7 788.2	7 829.6	7 871.1	7 912.8	7 954.6	7 996.7	8 039.0	8 081.5	8 124.1	8 167.0
42.	8 210.0	8 253.2	8 296.7	8 340.3	8 384.1	8 428.2	8 472.4	8 516.8	8 561.5	8 606.3
43.	8 651.3	8 696.5	8 742.0	8 787.6	8 833.5	8 879.5	8 925.8	8 972.3	9 018.9	9 065.8
44.	9 112.9	9 160.2	9 207.7	9 255.5	9 303.4	9 351.6	9 399.9	9 448.5	9 497.3	9 546.3
45.	9 595.6	9 645.0	9 694.7	9 744.6	9 794.7	9 845.0	9 895.6	9 946.4	9 997.4	10 049.
46.	10 100.	10 152.	10 204.	10 256.	10 308.	10 361.	10 414.	10 467.	10 520.	10 573.
47.	10 627.	10 681.	10 735.	10 790.	10 845.	10 899.	10 955.	11 010.	11 066.	11 122.
48.	11 178.	11 234.	11 291.	11 348.	11 405.	11 462.	11 520.	11 578.	11 636.	11 694.
49.	11 753.	11 812.	11 871.	11 930.	11 990.	12 049.	12 110.	12 170.	12 231.	12 292.
50.	12 353.	12 414.	12 476.	12 538.	12 600.	12 663.	12 725.	12 788.	12 852.	12 915.
51.	12 979.	13 043.	13 107.	13 172.	13 237.	13 302.	13 368.	13 433.	13 499.	13 566.
52.	13 632.	13 699.	13 766.	13 833.	13 901.	13 969.	14 037.	14 106.	14 175.	14 244.
53.	14 313.	14 383.	14 453.	14 523.	14 594.	14 665.	14 736.	14 807.	14 879.	14 951.
54.	15 023.	15 096.	15 169.	15 242.	15 316.	15 389.	15 464.	15 538.	15 613.	15 688.
55.	15 763.	15 839.	15 915.	15 991.	16 068.	16 145.	16 222.	16 299.	16 377.	16 455.
56.	16 534.	16 613.	16 692.	16 771.	16 851.	16 931.	17 012.	17 093.	17 174.	17 255.
57.	17 337.	17 419.	17 501.	17 584.	17 667.	17 750.	17 834.	17 918.	18 003.	18 087.
58.	18 173.	18 258.	18 344.	18 430.	18 516.	18 603.	18 690.	18 778.	18 866.	18 954.
59.	19 043.	19 131.	19 221.	19 310.	19 400.	19 491.	19 581.	19 672.	19 764.	19 856.
60.	19 948.	20 040.	20 133.	20 226.	20 320.	20 414.	20 508.	20 603.	20 698.	20 793.
61.	20 889.	20 985.	21 082.	21 179.	21 276.	21 374.	21 472.	21 571.	21 669.	21 769.
62.	21 868.	21 968.	22 069.	22 170.	22 271.	22 372.	22 474.	22 577.	22 679.	22 783.
63.	22 886.	22 990.	23 094.	23 199.	23 304.	23 410.	23 516.	23 622.	23 729.	23 836.
64.	23 944.	24 052.	24 160.	24 269.	24 379.	24 488.	24 598.	24 709.	24 820.	24 931.
65.	25 043.	25 155.	25 268.	25 381.	25 494.	25 608.	25 723.	25 837.	25 953.	26 068.
66.	26 184.	26 301.	26 418.	26 535.	26 653.	26 772.	26 890.	27 010.	27 129.	27 249.
67.	27 370.	27 491.	27 612.	27 734.	27 857.	27 979.	28 103.	28 226.	28 351.	28 475.
68.	28 600.	28 726.	28 852.	28 979.	29 106.	29 233.	29 361.	29 489.	29 618.	29 748.
69.	29 877.	30 008.	30 138.	30 270.	30 402.	30 534.	30 667.	30 800.	30 933.	31 068.
70.	31 202.	31 338.	31 473.	31 609.	31 746.	31 883.	32 021.	32 159.	32 298.	32 437.
71.	32 577.	32 717.	32 858.	32 999.	33 140.	33 283.	33 425.	33 569.	33 713.	33 857.
72.	34 002.	34 147.	34 293.	34 439.	34 586.	34 734.	34 882.	35 030.	35 179.	35 329.
73.	35 479.	35 630.	35 781.	35 933.	36 085.	36 238.	36 391.	36 545.	36 700.	36 855.
74.	37 010.	37 166.	37 323.	37 480.	37 638.	37 796.	37 955.	38 115.	38 275.	38 436.
75.	38 597.	38 758.	38 921.	39 084.	39 247.	39 411.	39 576.	39 741.	39 907.	40 073.
76.	40 240.	40 408.	40 576.	40 744.	40 914.	41 084.	41 254.	41 425.	41 597.	41 769.
77.	41 942.	42 116.	42 290.	42 464.	42 640.	42 815.	42 992.	43 169.	43 347.	43 525.
78.	43 704.	43 884.	44 064.	44 245.	44 426.	44 608.	44 791.	44 974.	45 158.	45 343.
79.	45 528.	45 714.	45 900.	46 088.	46 275.	46 464.	46 653.	46 843.	47 033.	47 224.
80.	47 416.	47 608.	47 801.	47 994.	48 189.	48 384.	48 579.	48 776.	48 972.	49 170.

PROTECTED BY COPYRIGHT

Table 2 (concluded)

Unit : kPa

T(°C)	0.0	0.1	0.2	0.3	0.4	0.5	0.6	0.7	0.8	0.9
81.	49 368.	49 567.	49 767.	49 967.	50 168.	50 370.	50 572.	50 775.	50 979.	51 183.
82.	51 388.	51 594.	51 800.	52 007.	52 215.	52 424.	52 633.	52 843.	53 053.	53 265.
83.	53 477.	53 689.	53 903.	54 117.	54 332.	54 547.	54 764.	54 981.	55 198.	55 417.
84.	55 636.	55 856.	56 076.	56 298.	56 520.	56 743.	56 966.	57 190.	57 415.	57 641.
85.	57 868.	58 095.	58 323.	58 552.	58 781.	59 011.	59 242.	59 474.	59 707.	59 940.
86.	60 174.	60 409.	60 644.	60 881.	61 118.	61 356.	61 594.	61 834.	62 074.	62 315.
87.	62 557.	62 799.	63 042.	63 286.	63 531.	63 777.	64 024.	64 271.	64 519.	64 768.
88.	65 017.	65 268.	65 519.	65 771.	66 024.	66 278.	66 532.	66 788.	67 044.	67 301.
89.	67 559.	67 817.	68 077.	68 337.	68 598.	68 860.	69 123.	69 386.	69 651.	69 916.
90.	70 182.	70 449.	70 717.	70 986.	71 255.	71 526.	71 797.	72 069.	72 342.	72 616.
91.	72 890.	73 166.	73 442.	73 719.	73 998.	74 277.	74 556.	74 837.	75 119.	75 401.
92.	75 685.	75 969.	76 254.	76 540.	76 827.	77 115.	77 404.	77 693.	77 984.	78 276.
93.	78 568.	78 861.	79 155.	79 450.	79 746.	80 043.	80 341.	80 640.	80 940.	81 240.
94.	81 542.	81 844.	82 148.	82 452.	82 757.	83 064.	83 371.	83 679.	83 988.	84 298.
95.	84 609.	84 921.	85 234.	85 547.	85 862.	86 178.	86 495.	86 812.	87 131.	87 451.
96.	87 771.	88 093.	88 415.	88 739.	89 063.	89 389.	89 715.	90 043.	90 371.	90 701.
97.	91 031.	91 362.	91 695.	92 028.	92 363.	92 698.	93 035.	93 372.	93 711.	94 050.
98.	94 391.	94 732.	95 075.	95 418.	95 763.	96 109.	96 455.	96 803.	97 152.	97 502.
99.	97 853.	98 204.	98 557.	98 911.	99 266.	99 623.	99 980.	100 338.	100 697.	101 058.
100.	101 419.	101 782.	102 145.	102 510.	102 875.	103 242.	103 610.	103 979.	104 349.	104 720.

NOTE : It is based on SONNTAG (1990). A temperature scale is ITS-90.

PROTECTED BY COPYRIGHT

Annex A (normative)
Simultaneous analytical method of hydrogen chloride and sulfur oxides by ion chromatography

A.1 Outline

This Annex specifies the simultaneous analysis method of hydrogen chloride and sulfur oxides in flue gas by ion chromatography. This method is affected by the coexistence of the reducing gas such as sulfides of high concentration in the sample gas, therefore, it is applicable for the case when the influences thereof can be neglected or eliminated.

A.2 Summary of analytical method

The summary of analytical method shall be as given in table A.1.

Table A.1 Summary of analytical method

Outline	Sampling	Determination range vol ppm (mg/m³)	
		Hydrogen chloride	Sulfur oxides
After absorption of hydrogen chloride and sulfur oxides in sample gas into hydrogen peroxide in absorbing bottle, it is introduced into ion chromatograph and chromatogram thereof is recorded.	Absorbing bottle method Absorption solution : hydrogen peroxide (1 + 99) Liquid amount : 25 ml [a] × 2 bottles or 50 ml [b] × 2 bottles Standard sampling volume : 20L	0.4 to 7.9 [c] (0.7 to 12) 6.3 to 160 [d] (10 to 260)	0.5 to 58 [c] (1.4 to 165) 12 to 290 [d] (35 to 829)

NOTE : This method is the same as that of Annex JC of **JIS K 0103**.

Notes [a] Liquid amount for absorption when using absorbing bottle (100 ml in capacity).

[b] Liquid amount for absorption when using absorbing bottle (250 ml in capacity).

[c] In the case of employing the sample solution for analysis prepared by diluting 50 ml of absorption solution through which the sample gas has been passed to 100 ml. The determination range shown in this column is obtained according to the standard sampling volume, the amount of sample solution for analysis and the optimum range of the working curve of the sample gas. When determining the concentration in this determination range or under, the concentrating column shall be used. For the concentration over the determination range, the sample solution for analysis shall be diluted to be within the determination range.

[d] In the case of employing the sample solution for analysis prepared by diluting 100 ml of absorption solution through which the sample gas has been passed to 250 ml. The determination range shown in this column is obtained according to the standard sampling volume, the amount of sample solution for analysis and the optimum range of the working curve of the sample gas. When determining the concentration in this determination range or under, the concentrating column shall be used. For the concentration over the determination range, the sample solution for analysis shall be diluted to be within the determination range.

A.3 Sampling method of sample gas

A.3.1 Sampling of sample gas

The sampling of sample gas shall be according to clause **5**.

PROTECTED BY COPYRIGHT

A.3.2 Reagents and preparation of reagent solutions

Reagents specified in **5.2** and used in the ion chromatography shall be used.

a) **Absorption solution [hydrogen peroxide (1 + 99)]** Take 10 ml of hydrogen peroxide and add water to make total total 1 L. This solution shall be stocked in a cold and dark place.

A.3.3 Implement and apparatus

According to **5.3**.

A.3.4 Sampling procedure

According to **5.4**.

A.3.5 Preparation of sample solution for analysis

After collecting hydrogen chloride and sulfur oxides in flue gas simultaneously into the absorption solution of **A.3.2 a)**, prepare it according to **6 a)**.

A.3.6 Calculation of sampling volume of sample gas

According to **5.5**.

A.4 Determination method

A.4.1 Reagents and preparation of reagent solutions

A.4.1.1 Reagents

Reagents specified in **7.1.2.1** shall be used, if not specially specified.

a) **Sulfate ion reference solution (SO_4^{2-} : 1 000 mg/L)**

A.4.1.2 Preparation of reagent solutions

The preparation of reagent solutions shall be as follows.

a) **Eluant** According to **7.1.2.2 a)**.

b) **Regeneration solution (removal solution)** According to **7.1.2.2 b)**.

c) **Sulfate ion reference solution (SO_4^{2-} : 1 mg/ml)** According to **7.1.2 b) 3)** of **JIS K 0103**.

d) **Sulfate ion reference solution (SO_4^{2-} : 0.2 mg/ml)** According to **7.1.2 b) 4)** of **JIS K 0103**.

e) **Mixed reference solution of chloride ion–sulfate ion (Cl^- : 0.01 mg/ml, SO_4^{2-} : 0.05 mg/ml)** Take 5 ml of chloride ion reference solution (Cl^- : 0.2 mg/ml) of **7.1.2.2 d)** and 25 ml of sulfate reference solution (SO_4^{2-} : 0.2 mg/ml) of **A.4.1.2 d)** accurately into a 100 ml of volumetric flask, and add water up to the marked line. Prepare it when it is used. Use it by diluting appropriately.

A.5 Ion chromatograph

The implements and apparatus shall be according to **7.1.3**.

PROTECTED BY COPYRIGHT

A.6 Procedure for determination

The procedure for determination shall be as follows.

a) Operate it according to **7.1.4**.

b) Introduce a definite amount (10 μl to 250 μl) of the sample solution for analysis prepared in **A.3.5** with a sample introducing device into the ion chromatograph, and record its chromatogram.

c) Obtain the peak areas or the peak heights for the peaks corresponding to chloride ion and sulfate ion on the chromatogram.

d) Obtain the concentrations (mg/ml) of chloride ion and sulfate ion in the sample solution for analysis according to the working curves prepared in **A.7**.

e) Take 50 ml of absorption solution prepared in **A.3.2 a)** into a 100 ml volumetric flask, add water up to the marked line, take the same amount as introduced in **b)**, carry out the procedures according to **b)** to **d)**, and obtain the blank test values (mg/ml) of chloride ion and sulfate ion in the absorption solution [1].

Note [1] When the absorbing bottle of 250 ml in capacity is used, take 100 ml of absorption solution into a 250 ml volumetric flask, add water up to the marked line, and carry out the same procedures.

A.7 Preparation of working curve

Use the mixed reference solution of chloride ion–sulfate ion of **A.4.1.2 e)**, and prepare the working curves according to **7.1.5**.

A.8 Calculation

Calculate the concentrations of hydrogen chloride and sulfur oxides in the sample gas.

a) Calculate the concentration of hydrogen chloride in the sample gas according to the formulae in **7.1.6**.

b) Calculate the concentration of sulfur oxides in the sample gas according to the following formulae.

$$C_V = \frac{0.233 \times (a-b) \times v}{V_S} \times 1\,000$$

$$C_W = \frac{0.667 \times (a-b) \times v}{V_S} \times 1\,000$$

$$C_W = C_V \times 2.86$$

where, C_V : volume fraction of sulfur oxides in sample gas (vol ppm)

C_W : mass concentration of sulfur oxides expressed as sulfur dioxide in sample gas (mg/m^3)

a : concentration of sulfur ion obtained in **A.6 d)** (mg/ml)

b : concentration of sulfur ion obtained by blank test in **A.6 e)** (mg/ml)

V_S : sampling volume of sample gas under standard condition

PROTECTED BY COPYRIGHT

calculated according to **5.5.** (L) (V_{SD} for dry-base gas volume and V_{SW} for wet-base gas volume)

v : liquid amount of sample solution for analysis of **6 a)** [100 referred as to 100 ml, 250 referred as to 250 ml]

0.233: volume of sulfur oxides (SO_2 + SO_3) equivalent to 1 mg of sulfate ion (SO_4^{2-}) (ml) (standard condition)

0.667: mass of sulfur dioxides (SO_2) equivalent to 1 mg of sulfate ion (SO_4^{2-}) (mg)

2.86: mass concentration of sulfur dioxides (SO_2) equivalent to 1 vol ppm of sulfur oxides (mg) (according to 64.06/22.41)

PROTECTED BY COPYRIGHT

Annex B (normative)

Simultaneous analytical method of hydrogen chloride, sulfur oxides and nitrogen oxides by ion chromatography

B.1 Outline

This Annex specifies the simultaneous analysis method of hydrogen chloride, sulfur oxides and nitrogen oxides in flue gas by ion chromatography. This method is affected by the coexistence of the reducing gas such as sulfides of high concentration in the sample gas, therefore, it is applicable for the case when the influences thereof can be neglected or eliminated.

B.2 Summary of analytical method

The summary of analytical method shall be as given in table B.1.

Table B.1 Summary of analytical method

Outline	Sampling	Determination range vol ppm (mg/m³)		
		Hydrogen chloride	Sulfur oxides	Nitrogen oxides
After absorption of hydrogen chloride, sulfur oxides and nitrogen oxides in sample gas into hydrogen peroxide in vacuum flask or syringe, it is introduced into ion chromatograph and chromatogram thereof is recorded.	Vacuum flask method Absorption solution : hydrogen peroxide (1 + 99) Liquid amount : 20 ml Standard sampling volume : 1 L	4 to 630 [c] (6 to 1 000)	5 to 1 100 [c] (14 to 3 100)	4 to 1 400 [c] (8 to 2 800)
	Syringe method Liquid amount : Hydrogen peroxide water (1 + 99) Liquid amount : 20 ml [a] Standard sampling volume : 400 ml [a] 150 ml [b]	16 to 3 100 [c] (26 to 5 000)	24 to 5 800 [c] (69 to 16 000)	19 to 7 200 [c] (39 to 14 000)

NOTE : This method is the same as that of Annex JA of **JIS K 0104**.
Notes [a] Sample volume of sample gas when using syringe (500 ml in capacity).
[b] Sample volume of sample gas when using syringe (200 ml in capacity).
[c] In the case of employing the sample solution for analysis prepared by diluting 100 ml of absorption solution through which the sample gas has been passed to 20 ml. The detection limit shown in this table can be made lower by the using concentrating column.

B.3 Sampling method of sample gas

B.3.1 Sampling of sample gas

The sampling of sample gas shall be according to clause **6** of **JIS K 0104**.

B.3.2 Reagents and preparation of reagent solutions

Reagents specified in **7.1.2** and used in the ion chromatography, and also specified in

PROTECTED BY COPYRIGHT

6.1.1 of **JIS K 0104** shall be used.

a) **Absorption solution [hydrogen peroxide (1 + 99)]** Take 10 ml of hydrogen peroxide and add water to make total 1 L. This solution shall be stocked in a cold and dark place.

b) **Implements and apparatus** According to **6.1.2** or **6.2.2** of **JIS K 0104**.

c) **Sampling procedure** According to **6.1.3** or **6.2.3** of **JIS K 0104**.

d) **Preparation of sample solution for analysis** After collecting hydrogen chloride, sulfur oxides and nitrogen oxides in flue gas simultaneously into the absorption solution of **B.3.2 a)**, prepare it according to **6.1.4 c)** or **6.2.4 c)** of **JIS K 0104**..

e) **Calculation of sampling volume of sample gas** According to **6.1.5** or **6.2.5** of **JIS K 0104**.

B.4 Determination method

B.4.1 Reagents and preparation of reagent solutions

B.4.1.1 Reagents

The reagents specified in **7.1.2.2**, **7.1.2** of **JIS K 0103** and **7.3** of **JIS K 0104** shall be used, if not specially specified.

a) **Sulfate ion reference solution (SO_4^{2-} : 1 000 mg/L)**

b) **Nitrate ion reference solution (NO_3^- : 1 000 mg/L)**

c) **Nitrite ion reference solution (NO_2^- : 1 000 mg/L)**

B.4.1.2 Preparation of reagent solutions

The preparation of reagent solutions specified in **7.1.2.2**, **7.1.2** of **JIS K 0103** and **7.3.1** of **JIS K 0104** shall be used, unless specially specified.

a) **Eluant** According to **7.1.2.2 a)**.

b) **Regeneration solution (removal solution)** According to **7.1.2.2 b)**.

c) **Sulfate ion reference solution (SO_4^{2-} : 1 mg/ml)** According to **7.1.2 b) 3)** of **JIS K 0103**.

d) **Sulfate ion reference solution (SO_4^{2-} : 0.2 mg/ml)** According to **7.1.2 b) 4)** of **JIS K 0103**.

e) **Nitrate ion reference solution (NO_3^- : 1 mg/ml)** According to **7.3.1 b) 3)** of **JIS K 0104**.

f) **Nitrate ion reference solution (NO_3^- : 0.1 mg/ml)** According to **7.3.1 b) 4)** of **JIS K 0104**.

g) **Nitrite ion reference solution (NO_2^- : 1 mg/ml)** According to **7.3.1 b) 5)** of **JIS K 0104**.

h) **Nitrite ion reference solution (NO_2^- : 0.1 mg/ml)** According to **7.3.1 b) 6)** of **JIS K 0104**.

PROTECTED BY COPYRIGHT

i) **Mixed reference solution of chloride ion–sulfate ion–nitrate ion [(Cl^- : 0.01 mg, SO_4^{2-} : 0.05 mg, NO_3^- : 0.04 mg)/ml]** Take 5 ml of chloride ion reference solution (Cl^- : 0.2 mg/ml) in **7.1.2.2 d)**, 25 ml of sulfate ion reference solution (SO_4^{2-} : 0.2 mg/ml) in **B.4.1.2 d)** and 40 ml of nitrate ion reference solution (NO_3^- : 0.1 mg/ml) in **B.4.1.2 f)** accurately into a 100 ml volumetric flask, and add water up to the marked line. When nitrite ion is coexisted in the sample solution for analysis, prepare the mixed reference solution to which a definite amount of nitrite ion reference solution (NO_2^- : 0.1 mg/ml) in **B.4.1.2 b)** is added, and use this solution by adequately diluted.

B.5 Ion chromatograph

The implements and apparatus shall be according to **7.1.3**.

B.6 Procedure for determination

The procedure for determination shall be as follows.

a) Operate it according to **7.1.4**.

b) Introduce a definite amount (10 μl to 250 μl) of the sample solution for analysis prepared in **6 a)** with a sample introducing device into the ion chromatograph, and record its chromatogram.

c) Obtain the peak areas or the peak heights for the peaks corresponding to chloride ion, sulfate ion and nitrate ion on the chromatogram.

d) Obtain the concentration of chloride ion, sulfate ion and nitrate ion (mg/ml) with the working curves prepared in **B.7**.

e) Take 20 ml of absorption solution prepared in **B.3.2 a)** into a 100 ml volumetric flask, add water up to the marked line, take the same amount as introduced in **b)**, carry out the procedures according to **b)** to **d)**, and obtain the blank test value (mg/ml) of chloride ion, sulfate ion and nitrate ion in the absorption solution [1].

   Note [1] When nitrite ion is coexisted, obtain the concentration of nitrite ion (mg/ml).

B.7 Preparation of working curve

Use the mixed reference solution of chloride ion–sulfate ion–nitrate ion in **B.4.1.2 i)**, and prepare the working curves according to **7.1.5**.

B.8 Calculation

Calculate the concentrations of hydrogen chloride, sulfur oxides and nitrogen oxides in the sample gas.

a) Calculate the concentration of hydrogen chloride in the sample gas according to the formulae in **7.1.6**.

b) Calculate the concentration of sulfur oxides in the sample gas according to the formulae in **A.8** or **JA.4.6 b) 1)** of **JIS K 0104**.

PROTECTED BY COPYRIGHT

c) Calculate the concentration of nitrogen oxides in the sample gas.

$$C_V = \frac{[0.361 \times (a_1 - b_1) + 0.487 \times (a_2 - b_2)] \times 100}{V_S} \times 10^6$$

$$C_W = \frac{[0.742 \times (a_1 - b_1) + 1.000 \times (a_2 - b_2)] \times 100}{V_S} \times 10^6$$

$$C_W = C_V \times 2.05$$

where,

C_V: volume fraction of nitrogen oxides in sample gas (vol ppm)

C_W: mass concentration of nitrogen dioxide expressed as sulfur oxides in sample gas (mg/m^3)

a_1 : concentration of nitrate ion obtained in **B.6 d)** (mg/ml)

b_1 : concentration of nitrate ion obtained by blank test in **B.6 e)** (mg/ml)

a_2 : concentration of nitrite ion obtained in **B.6 d)** (mg/ml) [2)]

b_2 : concentration of nitrite ion obtained by blank test in **B.6 e)** (mg/ml) [2)]

V_S : sampling volume of sample gas under standard condition calculated according to **6.1.5** or **6.2.5** of **JIS K 0104** (ml)

(V_{SD} for dry-base gas volume and V_{SW} for wet-base gas volume)

100 : when total amount of sample solution for analysis is 100 ml in **6 a)**

0.361: volume of nitrogen oxides equivalent to 1 mg of nitrate ion (NO_3^-) (ml) (standard condition)

0.487: volume of nitrogen oxides equivalent to 1 mg of nitrite ion (NO_2^-) (ml) (standard condition)

0.742: mass of nitrogen dioxides (NO_2) equivalent to 1 mg of nitrate ion (NO_3^-) (mg)

1.000: mass of nitrogen oxides (NO_2) equivalent to 1 mg of nitrite ion (NO_2^-) (mg)

2.05: mass concentration of nitrogen dioxides (NO_2) equivalent to 1 vol ppm of nitrogen oxides (mg/m^3) (according to 46.01/22.41)

Note [2)] Where nitrite ion does not exist, it may be ignored.

PROTECTED BY COPYRIGHT

Annex C (normative)
Ion selective electrode method

C.1 Summary

This method is affected by the coexistence of other halogenides, cyanides, sulfides and the like in the sample gas; therefore, this Annex is applicable for the case when the influences thereof can be neglected or eliminated.

NOTE : When hydrogen chloride and chlorine are coexisted in flue gas, the sample gas is taken by using the sodium hydroxide solution (0.1 mol/L) to which diarsenic trioxide (As_2O_3 : 1 g/L) is added as the absorption solution, and the concentration of chloride ion (a mg/ml) is obtained. It is recommended so that the concentration of chlorine in the sample gas is measured simultaneously according to the absorptiometric analysis specified in **JIS K 0106** and the like, the concentration of chloride ion (b mg/ml) corresponding to the concentration of chlorine is subtracted from the concentration of chloride ion, and the concentration of hydrogen chloride (mg/m^3) in the sample gas is obtained from $a - b$.

The disturbance can be avoided to about 10^{-5} mol/L by adjusting at pH 5 in the case of cyanides and by adding equivalent permanganate in the case of sulfide.

Care shall be taken of the handling of hazardous diarsenic trioxide and its waste solution.

C.2 Summary of analytical method

The summary of analytical method shall be as given in table C.1.

Table C.1 Summary of analytical method

Outline	Sampling	Determination range vol ppm (mg/m^3)
After absorption of hydrogen chloride in sample gas into potassium nitrate solution, acetate buffer solution is added, and measurement is carried out using chloride ion selective electrode.	Absorbing bottle method Absorption solution ; Potassium nitrate solution (0.1 mol/L) Liquid amount : 50 ml [a] × 2 bottles Standard sampling volume : 40 L	40 to 40 000 [b] (64 to 64 000)
Notes [a] Liquid amount for absorption when using absorbing bottle (250 ml in capacity). [b] In the case of employing the sample solution for analysis prepared by diluting 100 ml of absorption solution through which the sample gas has been passed to 250 ml. The determination range shown in this column is obtained according to the standard sampling volume, the amount of sample solution for analysis and the optimum range of the working curve of the sample gas.		

PROTECTED BY COPYRIGHT

C.3 Sampling method of sample gas

C.3.1 Sampling of sample gas

The sampling of sample gas shall be according to clause **5**.

C.3.2 Reagents and preparation of reagent solutions

The reagents and preparation of reagent solutions shall be as follows.

a) **Potassium nitrate** That specified in **JIS K 8548**.

b) **Absorption solution [potassium nitrate solution (0.1 mol/L)]** Weigh out 10.1 g of potassium nitrate and dissolve it in water to make total 1 L.

C.3.3 Implement and apparatus

According to **5.3**.

C.3.4 Sampling procedure

According to **5.4**.

C.3.5 Preparation of sampling solution for analysis

After collecting hydrogen chloride in flue gas into the absorption solution in **C.3.2 b)**, prepare it according to the the same operation as **6 b)**.

C.3.6 Calculation of sampling volume of sample gas

According to **5.5**.

C.4 Determination method

C.4.1 Reagents and preparation of reagent solutions

C.4.1.1 Reagents

The reagents shall be as follows.

a) **Acetic acid** That specified in **JIS K 8355**.

b) **Potassium nitrate** That specified in **JIS K 8548**.

c) **Sodium acetate trihydrate** That specified in **JIS K 8371**.

d) **Sodium chloride** Reference material for volumetric analysis specified in **JIS K 8005**.

e) **Reference solution of chloride ion (Cl^- : 1 000 mg/L)**

f) **Absorption solution [potassium nitrate solution (0.1 mol/L)]** Weigh out 10.1 g of potassium nitrate and dissolve it in water to make total 1 L.

g) **Potassium chloride** That specified in **JIS K 8121**.

C.4.1.2 Preparation of reagent solutions

The preparation of reagent solutions shall be as follows.

a) **Potassium chloride saturated solution** Prepare that of about 3.3 mol/L of satu-

PROTECTED BY COPYRIGHT

rated solution with potassium chloride.

b) **Potassium nitrate solution (100 g/L)** Prepare that of about 1 mol/L.

c) **Acetate buffer solution** [1] Take 100 g of sodium acetate trihydrate and 50 g of potassium nitrate in a 500 ml beaker, add water to make about 300 ml, adjust pH at 5.1 to 5.2 by adding acetic acid, then add water to make total 500 ml.

d) **Chloride ion reference solution (Cl^- : 10 mg/ml)** Heat the sodium chloride of the reference material for volumetric analysis in **C.4.1.1 d)** at about 600 °C for about 1 h beforehand, and allow it to cool in a desiccator. Weigh out 16.48 g thereof, dissolve it in an appropriate amount of absorption solution, transfer it into a 1 000 ml volumetric flask by washing it with the absorption solution, and add the absorption solution up to the marked line.

e) **Chloride ion reference solution (Cl^- : 1 mg/ml)** Take 25 ml of the chloride ion reference solution (1 000 mg/L) of which the traceability specified in the national measurement standard is secured or the chloride ion reference solution prepared in **d)** and 25 ml of absorption solution into a 250 ml volumetric flask, add 5 ml of acetate buffer solution, then add water up to the marked line.

f) **Chloride ion reference solution (Cl^- : 0.1 mg/ml)** Take 25 ml of the chloride ion reference solution (Cl^- : 1 mg/ml) prepared in **e)** and 25 ml of the absorption solution into a 250 ml volumetric flask, add 5 ml of acetate buffer solution, then add water up to the marked line.

g) **Chloride ion reference solution (Cl^- : 0.01 mg/ml)** Take 25 ml of the chloride ion reference solution (0.1 mg/ml) prepared in **f)** and 25 ml of the absorption solution into a 250 ml volumetric flask, add 5 ml of acetate buffer solution, then add water up to the marked line.

Note [1] The buffer solution is the solution by which the pH of sample solution for analysis is adjusted at about 5 at the time of measurement and the ion intensity is made to be constant.

C.5 Implements and apparatus

The implements and apparatus shall be as follows.

a) **Potentiometer** High input resistance potentiometer with 1 mV in minimum graduation such as the ion meter, digital type pH-mV meter, pH-mV meter with expanded span.

b) **Chloride ion selective electrode** Used for the indicator electrode such as the silver chloride solid-state membrane electrode.

c) **Reference electrode** That of the double liquid junction-type in which the inner liquid junction part is made of the ceramics and the outer liquid junction part is made of the sleeve is used. Potassium chloride saturated solution is used for the inner solution, and potassium nitrate solution (100 g/L) is used for the outer solution. The tightening of sleeve shall be adjusted so that the outer solution flows out appropriately. It is stored [2] in the same solution as the outer solution.

PROTECTED BY COPYRIGHT

d) **Magnetic stirrer** That does not change the solution temperature due to heat generation of motor.

Note [2] In the case of a long period of storage, potassium chloride saturated solution shall be used for both of the inner solution and the outer solution.

C.6 Procedure for determination

The procedure for determination shall be as follows.

a) Take 100 ml of the sample solution for analysis prepared in clause **6 b)** in a 300 ml beaker, measure the potential according to the the same operation as **C.7 a)**, and obtain the concentration of chloride ion (mg/ml) from the working curve prepared in **C.7 c)**.

b) Operate on 100 ml of absorption solution according to **a)**, and obtain the blank test value (mg/ml) of the concentration of chloride ion.

NOTE : The standard addition method may be used. The operation shall be as follows.

Take 100 ml of the sample solution for analysis into a beaker, carry out the same operation as **C.7 a)**, and read the potential E_0. Next, add the chloride ion reference solution (C) (mg/ml) of 100 times to 1 000 times of the target sample from the working curve every 1 ml successively, and measure the potential E_1, E_2, and E_3 generated at this time. Take the difference between these values and E_0 as ΔE_1, ΔE_2 and ΔE_3 respectively, obtain the potential slope S [3] in the neighbourhood of the concentration measured at that time from the working curve, and obtain the concentration of chloride ion (a) (mg/ml) according to the following formulae.

$$a_1=\frac{C}{101\times10^{\Delta E_1/S}-100} \quad \cdots\cdots (C.1)$$

$$a_2=\frac{C}{102\times10^{\Delta E_2/S}-100} \quad \cdots\cdots (C.2)$$

$$a_3=\frac{C}{103\times10^{\Delta E_3/S}-100} \quad \cdots\cdots (C.3)$$

$$a=\frac{1}{3}(a_1+a_2+a_3) \quad \cdots\cdots (C.4)$$

where, ΔE_1, ΔE_2, ΔE_3 : ΔE_1, ΔE_2, ΔE_3 in **C.6 b)**

In addition, carry out the same operation on 100 ml of absorption solution, and obtain the blank test value of the concentration of chloride ion (b) (mg/ml).

Note [3] The potential slope means the potential change when the concentration of chloride ion is changed 10 times. In the case of chloride ion selective electrode, it is usually 55 mV to 57 mV at 25 °C.

PROTECTED BY COPYRIGHT

C.7 Preparation of working curve

The preparation of working curve shall be as follows.

a) Take 100 ml of the chloride ion reference solution (Cl^- : 0.01 mg/ml) into a 300 ml beaker, immerse the chloride ion selective electrode [4] and the reference electrode in it, and stir it at a definite speed by a magnetic stirrer. After the indication is stabilized, measure the potential [5), 6)].

b) Carry out the operation of **a)** on the chloride ion reference solution (Cl^- : 0.1 mg/ml) and the chloride ion reference solution (Cl^- : 1 mg/ml), and measure the potential [5), 6)]. Make the solution temperature so as not to change by not less than 1 °C during a series of operation. The potential difference between the chloride ion reference solution (Cl^- : 0.01 mg/ml) and the chloride ion reference solution (Cl^- : 1 mg/ml) comes in the range between 110 mV and 120 mV, and the working curve between 0.01 mg/ml and 10 mg/ml in the concentration of chloride ion becomes a straight line.

c) Take the concentration of chloride ion on the logarithmic axis of semi-logarithmic section paper and take the potential difference on the equal axis, plot [6)] the relation between the concentration of chloride ion (mg/ml) and the potential (mV), and prepare the working curve.

d) In the case of the concentration direct reading type meter, it is recommended that the calibration of graduation (span adjustment) be carried out several times repeatedly by using the chloride ion reference solution (Cl^- : 0.01 mg/ml) and the chloride ion reference solution (Cl^- : 1 mg/ml) in place of the preparation of working curve.

Notes [4)] When the sensitive membrane is contaminated, the response speed becomes slow, therefore it is recommended that the sensitive membrane is polished with abrasive paper.

[5)] This measurement is carried out according to the instruction manual. When the solution of high concentration of chloride ion is measured then the solution of low concentration is measured, the electrode shall be washed with water, and immersed for a while in a new absorption solution [that operated according to **6 b) 2)** and adjusted at about pH 5], then the measurement shall be carried out.

When the indication of potentiometer becomes unstable at the stirring speed, the resistance of reference electrode becomes large in some case.

[6)] The response time of chloride ion elective electrode is about for 1 min in the case of 0.01 mg/ml in the concentration of chloride ion and about for 30 s in the case of not less than 0.1 mg/ml.

C.8 Calculation

The concentration of hydrogen chloride in sample gas shall be calculated according to the following formulae.

PROTECTED BY COPYRIGHT

$$C_V = \frac{0.632 \times (a-b) \times 250}{V_S} \times 1\,000 \quad \cdots\cdots (C.5)$$

$$C_W = \frac{1.03 \times (a-b) \times 250}{V_S} \times 1\,000 \quad \cdots\cdots (C.6)$$

$$C_W = C_V \times 1.63$$

where, C_V : volume fraction of hydrogen chloride in sample gas (vol ppm)

C_W : mass concentration of hydrogen chloride in sample gas (mg/m^3)

a : concentration of chloride ion obtained in **C.6 a)** (mg/ml)

b : concentration of chloride ion obtained by blank test in **C.6 b)** (mg/ml)

V_S : amount of sample gas under standard condition calculated in **5.5** (L) (V_{SD} for dry-base gas volume and V_{SW} for wet-base gas volume)

0.632 : volume of hydrogen chloride (HCl) equivalent to 1 mg of chloride ion (Cl^-) (ml) (standard condition)

1.03 : mass of hydrogen chloride (HCl) equivalent to 1 mg of chloride ion (Cl^-) (mg)

1.63 : mass concentration of hydrogen chloride equivalent to 1 vol ppm of hydrogen chloride (HCl) (mg/m^3) (according to 36.45/22.41)

PROTECTED BY COPYRIGHT

Annex D (informative)
Mercury (II) thiocyanate absorptiometry

D.1 Outline

This method is affected by the coexistence of sulfur dioxide, other halogenides, cyanides, sulfides and the like in the sample gas; therefore, this Annex is applicable as reference for the case when the influences thereof can be neglected or eliminated.

The case where the effect of chlorine in flue gas is not negligible should refer to NOTE in **C.1**.

D.2 Summary of analytical method

The summary of analytical method is as given in table D.1.

Table D.1 Summary of analytical method

Outline	Sampling	Determination range vol ppm (mg/m^3)
After absorption of hydrogen chloride in sample gas into sodium hydroxide solution, add mercury (II) thiocyanate solution and ammonium iron (III) sulfate solution to develop the colour, and measure absorbance (460 nm)	Absorbing bottle method Absorption solution : Sodium hydroxide solution (0.1 mol/L) Liquid amount : 50 ml [a] × 2 bottles Standard sampling volume : 40 L	2 to 80 [b] (3 to 130)
Notes [a] Liquid amount for absorption when using absorbing bottle (250 ml in capacity). [b] In the case of employing the sample solution for analysis prepared by diluting 100 ml of absorption solution through which the sample gas has been passed to 250 ml.		

D.3 Sampling method of sample gas

D.3.1 Sampling of sample gas

The sampling of sample gas is according to clause **5**.

D.3.2 Reagents and preparation of reagent solutions

Reagents and preparation of reagent solutions are as follows.

a) **Sodium hydroxide** That specified in **JIS K 8576**.

b) **Absorption solution [sodium hydroxide (0.1 mol/L)]** Weigh out 4.0 g of sodium hydroxide, and dissolve it in water to make total 1 L.

D.3.3 Implement and apparatus

According to **5.3**.

D.3.4 Sampling procedure

PROTECTED BY COPYRIGHT

According to **5.4**.

D.3.5 Preparation of sample solution for analysis

After collecting hydrogen chloride in flue gas into the absorption solution in **D.3.2 b)**, prepare it according to the the same operation as **6 b)**.

D.3.6 Calculation of sampling volume of sample gas

According to **5.5**.

D.4 Determination method

D.4.1 Reagents and preparation of reagent solutions

D.4.1.1 Reagents

The reagents are as follows.

a) **Perchloric acid** That specified in **JIS K 8223**.

b) **Mercury (II) thiocyanate**

c) **Ammonium iron (III) sulfate 12-water** That specified in **JIS K 8982**.

d) **Methanol** That specified in **JIS K 8891**.

e) **Chloride ion reference solution (Cl^- : 1 000 mg/L)**

f) **Absorption solution [sodium hydroxide (0.1 mol/L)]** Prepared in **D.3.2 b)**.

D.4.1.2 Preparation of reagent solutions

The preparation of reagent solutions is as follows.

a) **Mercury (II) thiocyanate methanol solution** Dissolve 0.4 g of mercury (II) thiocyanate in 100 ml of methanol. Preserve it in a brown coloured bottle.

b) **Ammonium iron (III) sulfate solution** Dissolve 6.0 g of ammonium iron (III) sulfate 12-water in 100 ml of perchloric acid (1 + 2). Preserve it in a brown coloured bottle.

c) **Chloride ion reference solution (Cl^- : 1 mg/ml)** According to **7.1.2.2 c)**.

d) **Chloride ion reference solution (Cl^- : 0.02 mg/ml)** Take accurately 2.0 ml of chloride ion reference solution (Cl^- : 1 mg/ml) prepared in **c)** into a 100 ml volumetric flask, and add water up to the marked line. Prepare it when it is used.

D.5 Apparatus

The apparatus is as follows.

a) **Spectrophotometer or photoelectric photometer**

D.6 Procedure for determination

The procedures for determination are as follows.

a) Take 5 ml of sample solution for analysis prepared in **D.3.5** into a test tube with a

PROTECTED BY COPYRIGHT

ground stopper.

b) Add 2 ml of ammonium iron (III) sulfate solution, 1 ml of mercury (II) thiocyanate methanol solution and 10 ml of methanol, and shake them after stoppered.

c) Maintain the temperature of solution at 20 °C ± 2 °C. Leave the solution for about 10 min as it is, transfer it to a 10 mm of absorption cell and measure the absorbance in the neighbourhood of 460 nm in wavelength.

d) Obtain the mass (mg) of chloride ion (Cl^-) from the working curve prepared in **D.7** [1].

e) Take 2 ml of absorption solution into a test tube with a ground stopper, add water to make total 5 ml, carry out the procedures of **b)** to **d)**, and obtain the blank test value (mg).

Note [1] The used coloured absorption solution contains mercury compound, therefore give special care to the disposal of it.

D.7 Preparation of working curve

The preparation of working curve is as follows.

a) Take stepwise several amounts from 0 ml to 5 ml of chloride-ion reference solution (Cl^- : 0.02 mg/ml) into as many test tubes with ground stoppers, add water to each tube to make total 5 ml.

b) Carry out the procedures of **b)** and **c)** in **D.6**. When measuring absorbance, use the solution which has been prepared by treating the solution free from chloride-ion reference solution.

c) Prepare the relation curve between the mass of chloride ion (mg) and the absorbance.

D.8 Calculation

The concentration of hydrogen chloride in sample gas is calculated according to the following formulae.

$$C_V = \frac{0.632 \times (a-b) \times 250/5}{V_S} \times 1\,000$$

$$C_W = \frac{1.03 \times (a-b) \times 250/5}{V_S} \times 1\,000$$

$$C_W = C_V \times 1.63$$

PROTECTED BY COPYRIGHT

where, C_V : volume fraction of hydrogen chloride in sample gas (vol ppm)

C_W : mass concentration of hydrogen chloride in sample gas (mg/m^3)

a : mass of chloride ion obtained in **D.6 d)** (mg)

b : mass of chloride ion obtained by blank test in **D.6 e)** (mg)

V_S : sampling volume of sample gas under standard condition calculated according to **5.5** (L) (V_{SD} for dry-base gas volume and V_{SW} for wet-base gas volume)

0.632 : volume of hydrogen chloride (HCl) equivalent to 1 mg of chloride ion (Cl^-) (ml) (reference solution)

1.03 : mass of hydrogen chloride (HCl) equivalent to 1 mg of chloride ion (Cl^-) (mg)

1.63 : mass concentration of hydrogen chloride (HCl) equivalent to 1 vol ppm of hydrogen chloride (mg/m^3) (according to 36.45/22.41)

PROTECTED BY COPYRIGHT

Errata for JIS (English edition) are printed in *Standardization and Quality Control*, published monthly by the Japanese Standards Association, and also provided to subscribers of JIS (English edition) in *Monthly Information*.

Errata will be provided upon request, please contact:

Standards Publishing Department, Japanese Standards Association
4-1-24, Akasaka, Minato-ku, Tokyo, 107-8440 JAPAN
TEL. 03-3583-8002 FAX. 03-3583-0462

PROTECTED BY COPYRIGHT 2014-01-16 Printed by JSA